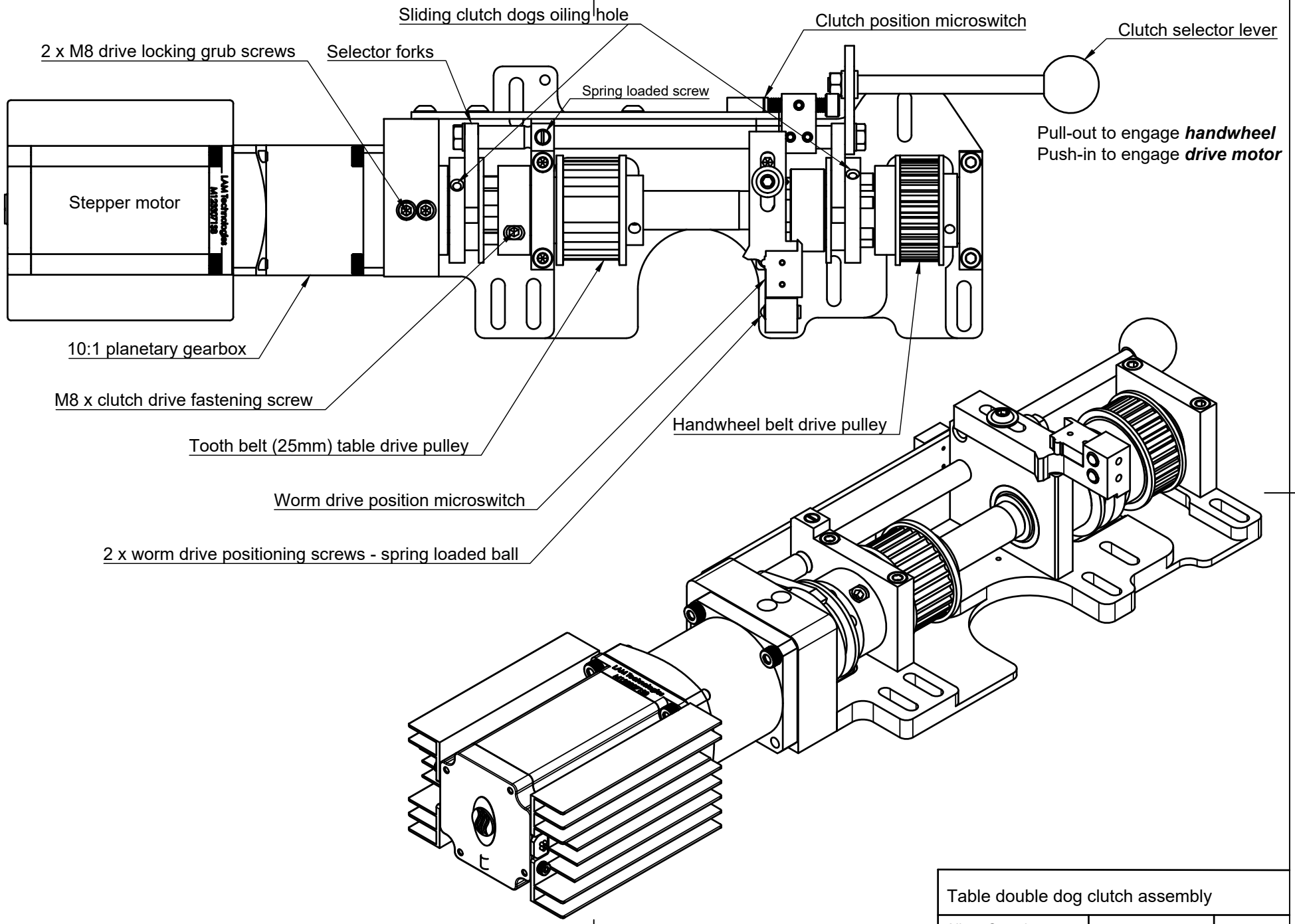

Table double dog clutch assembly		
Albert Questiaux	2025/06/28	Ver 3